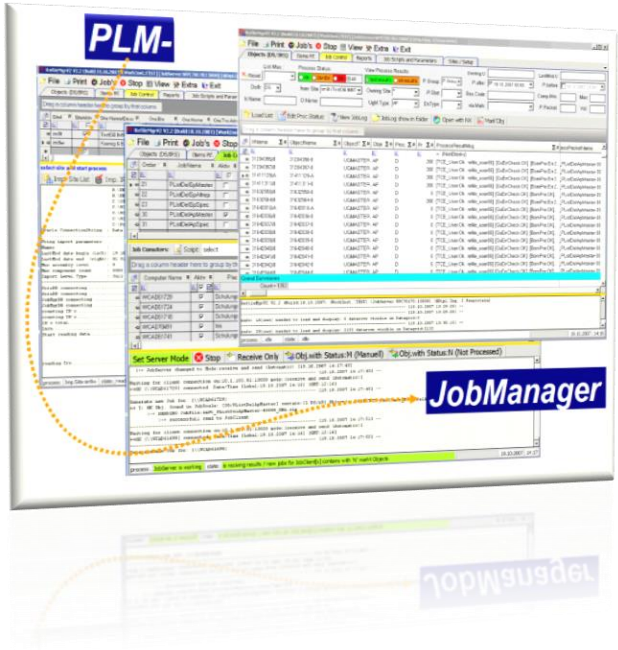

PLMJobManager - Presentation
Compare NX Data via CheckBox

Table of content

Introduction – initial situation	Slides: 3 - 4
Introduction CheckBox Process Overview	Slide: 5
Introduction NXCheckBox Data Extraction	Slide: 6
Introduction NXCheckBox Compare Data	Slide: 7
Introduction NXCheckBox Details off Extracted XML Data	Slide: 8
Introduction NXCheckBox Details of Difference Report	Slide: 9
Introduction NXCheckBox Analyze Data Compare Drawings	Slide: 10
Introduction CheckBox Analyze Data Compare CB.xml files	Slide: 11
Introduction NXCheckBox Analyze Data Get Entire Results	Slide: 12
Introduction NXCheckBox Analysis for NX Continous Release	Slide: 13
Introduction CheckBox performance data recording	Slides: 14 - 15
Introduction NXCheckBox performance data recording	Slide: 16
Benefits	Slide: 17
Introduction NXCheckBox Involved Company's	Slide: 19
System requirements	Slide: 20

Introduction – initial situation

CheckBox is a solution to extract geometrical data, non geometrical data and drawings from NX-Parts for comparison, to detect differences between these parts.

Ever NX Version change raises the following questions:

- Does **“my data”** change because of the conversion to the new NX version?
- Can **“my data”** still be opened, update, edit and saved?
- Is **“my data”** in the new version in the same way manageable as in the current productive version?

This questions can only be answered when the **“own data”** is verified through appropriate methods!

A manual verification is very comprehensive and requires a **huge amount of time**. In addition, the tests are only successful if such manual checks are performed systematically. The **immense time** required for manual testing in practice leads to the fact that this part of the conversion is usually treated only superficially.

To answer these questions the software **CheckBox** was developed in cooperation with the companies **BSH, KBA, MTU, Renk, ASML** and **S-PLM**

Introduction – initial situation

The goal:

Developing a tool that answers the following question:

Are the data in the new version the same as in the old version?

The following slides show you the concept on how to check the data in a save way with the help of the NXCheckBox and the PLMJobManager.

Introduction CheckBox Process Overview

How is CheckBox working?

Step 1: Extraction NX8.5 Data

Result: extracted NX8.5 Data

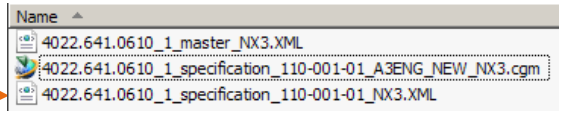

Step 2: Extraction NX12 Data

Result: extracted NX12 Data

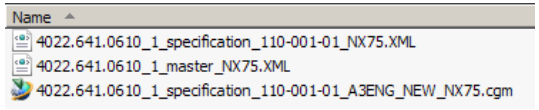

Step 3: Generate Analyze Data

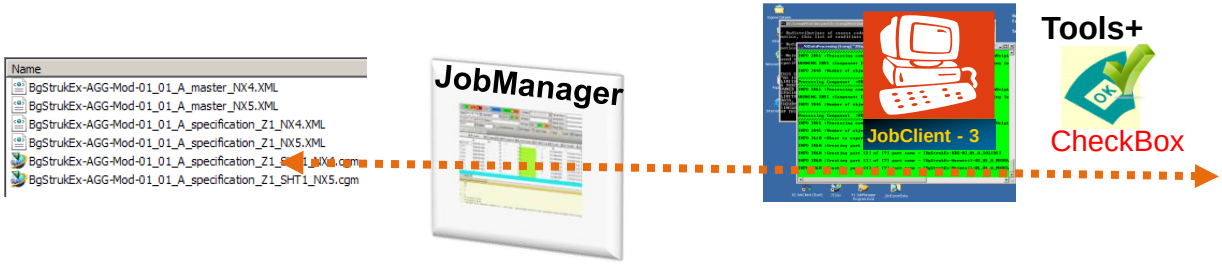

Result: NX8.5-12 Analyze Data

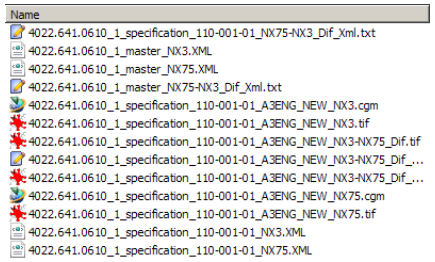

Introduction NXCheckBox Data Extraction

After extracting NXCheckBox Data the CB.Log files is analysed an the results are listed as partial Results. The following list shows how we do classify the NXCheckBox extraction Results.

- PL = Part load (1)
- UF = Update all Feature (2)
- UD = Update Drawing (3)
- PH = Part Header (4)
- MD = Model Data (5)
- AS = Assembly Data (6)
- DR = Drawing Data (8)
- EN = Entity (9)
- CBXml = CB.Data File (xml) (10)
- CGM = Drawing .cgm Files

The results of extracting data is imported into the JobServer Database.

```
[677] doune init program result file
[680] single_part = #D:\NxData\BgStrukNx75\BgStrukEx-Einzeltei
[721] loading part
Info: Memory Load     = 33
Info: dwAvailPhys = 11109156
Info: dwAvailPageFile = 26648496
Info: dwAvailVirtual = -586564


==============================================================
Start Check at  Sat Feb 02 14:49:28 2013

[496] partname = #D:\NxD  BgStrukNx75\BgStrukEx-Einzelteil-0
Info: Part = D:\NxData\Bg  rukNx75\BgStrukEx-Einzelteil-04_dwg
Info: xml_file = D:\NxData\BgStrukNx75\BgStrukEx-Einzelteil-04
[537] xmlfile = #D:\NxData\BgStrukNx75\BgStrukEx-Einzelteil-04
---------------------------
[541] do the update
Update: All Features
Update: All Features ---> passed
Update: Drawing views
Update: Drawing views ---> passed
[543] done the update
---------------------------
Info: init_xml_file
Info: init_xml_file --> passed
Info: write_xml_header
Info: write_xml_header --> passed
Info: Part Header Section
Info: Part Header Section --> passed
Info: Check_Model Section
Info: Check_Model Section --> passed
Info: Check_Assembly Section
Info: Check_Assembly Section --> passed
Info: Check_Drawing Section
Info: Check_Drawing Section --> passed
Info: Check_Entities Section
Info: Check_Entities Section --> passed
Info: write_xml_end Section
Info: write_xml_end Section --> passed
---------------------------
CGM: Output (Sheet 1) to [D:\NxData\BgStrukNx75\BgS  kEx-Einz
CGM: Cgm_Def_Color_Option = UF_PLOT_BLACK_ON_WHITE
CGM: Cgm_Def_Color_Option = UF_PLOT_BLACK_ON_WHITE --> passed
---------------------------
Finished checking at  Sat Feb 02 14:49:31 2013
```

Introduction NXCheckBox Compare Data

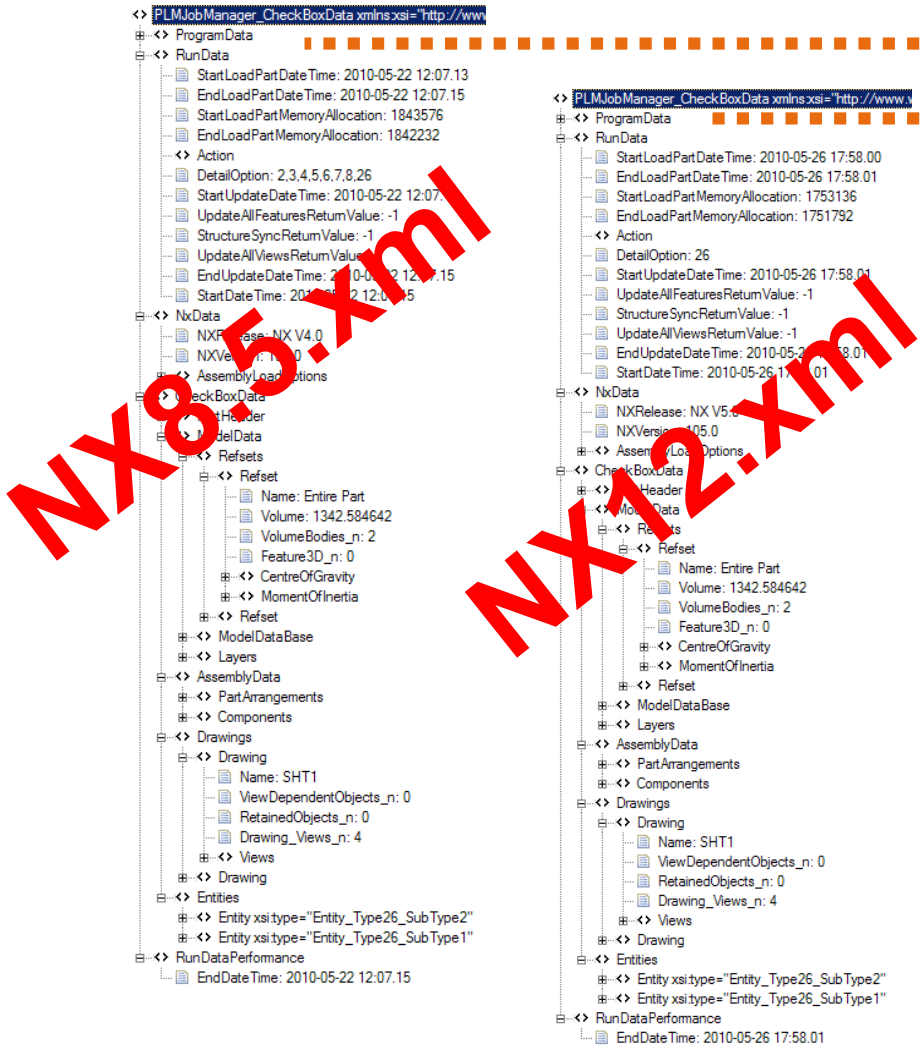

Compare → having Differences? **YES** **NO**

Create extended Data:
- DifReport.txt
- Dif.tif

Result Is OK

Result is an Error:
In this case it is required to Check what is the reason for this differences

Introduction NXCheckBox Details off Extracted XML Data

Job Data:

- ProgramData
  - ProgramName: NxCheckBox
  - ProgramRelease: V1.1.1.18
  - BuildDate: (May 20 2010)
  - CustomLicense: unknown
- RunData
  - StartLoadPartDateTime: 2010-05-26 17:58.00
  - EndLoadPartDateTime: 2010-05-26 17:58.01
  - StartLoadPartMemoryAllocation: 1753136
  - EndLoadPartMemoryAllocation: 1751792
  - Action
  - DetailOption: 26
  - StartUpdateDateTime: 2010-05-26 17:58.01
  - UpdateAllFeaturesReturnValue: -1
  - StructureSyncReturnValue: -1
  - UpdateAllViewsReturnValue: -1
  - EndUpdateDateTime: 2010-05-26 17:58.01
  - StartDateTime: 2010-05-26 17:58.01
- NxData
  - NXRelease: NX V5.0
  - NXVersion: 105.0
  - AssemblyLoadOptions
    - load_options: 1 [UF_ASSEM_load_from_search_dirs]
    - parts_list: 0
    - update: 1 [UF_ASSEM_update_report]

ModelData:

- ModelData
  - Refsets
    - Refset
      - Name: Entire Part
      - Volume: 1342.584642
      - VolumeBodies_n: 2
      - Feature3D_n: 0
      - CentreOfGravity
        - X: 10.078155
        - Y: 7.560351
        - Z: 1.238954
      - MomentOfInertia
        - X: 815346.315993
        - Y: 1455367.113393
        - Z: 2220782.513485
    - Refset
  - ModelDataBase
    - Features
      - TotalFeatures_n: 0
      - AliveFeatures_n: 0
      - SuppressedFeatures_n: 0
      - CondemnedFeatures_n: 0
      - DeletedFeatures_n: 0
      - TemporaryFeatures_n: 0
    - Bodies

Component:

- Components
  - Component
  - Component
    - File: %UGMGR=V3.2 PH=QnBdUZwmVe1p
    - Handle: RM%UL=V1.0 PH=wTDdUZwmVe
    - SuppressState: 0
    - SuppressByExpression
    - ReferenceComponent
    - RefsetCurr: EINFACH
    - InstanceName: BGSTRUKEX-KBG-01_01
    - ComponentLevel: 2
    - Callout: 10
    - MemberCount: 59
    - ComponentArrangement
      - UsedArrangement: Arrangement 1
    - Mating
    - Matrix
      - X1: 1.000000
      - Y1: 0.000000
      - Z1: 0.000000
      - X2: 0.000000
      - Y2: 1.000000
      - Z2: 0.000000
      - X3: 0.000000
      - Y3: 0.000000
      - Z3: 1.000000
      - originX: 360.000000
      - originY: -420.000000
      - originZ: 0.000000

Introduction NXCheckBox Details of Difference Report

DifReport.txt

```
CheckBox Report:
JM CheckBoxVer...:V2.696 (Build:26.10.2010)
Date.............:26.10.10 22:37:10

CheckBox.Data 1:[NX V3.0[103.0]]                                  |CheckBox.Data 2[NX V7.5[107.0]]
------------------------------------------------------------------|------------------------------------------------------------------
CliName.:[@DB/4022.625.4014/2/specification/110-001-01]           |CliName.:[@DB/4022.625.4014/2/specification/110-001-01]
PartDesc:                                                         |PartDesc:
PartHis.:~                                                        |PartHis.:25 19 Oct 10 00:55 NT Intel jfeuerst NX 7.5.1.5 - External U~
PartHis.:24 18 Oct 10 22:29 NT Intel jfeuerst NX 3.0.3.2 - External ~|PartHis.:24 29 Jul 10 11:47 NT Intel JFeuerst NX 7.5.0.32 (NX Manager~
PartHis.:23 10 May 10 17:00 NT Intel gmiddel NX 3.0.3.2<!<OT_PUB>!>  |PartHis.:23 10 May 10 17:00 NT Intel gmiddel NX 3.0.3.2<!<OT_PUB>!>
PartHis.:22 10 May 10 16:41 NT Intel gmiddel NX 3.0.3.2<!<OT_PUB>!>  |PartHis.:22 10 May 10 16:41 NT Intel gmiddel NX 3.0.3.2<!<OT_PUB>!>
PartHis.:21 10 May 10 16:32 NT Intel gmiddel NX 3.0.3.2<!<OT_PUB>!>  |PartHis.:21 10 May 10 16:32 NT Intel gmiddel NX 3.0.3.2<!<OT_PUB>!>
------------------------------------------------------------------|------------------------------------------------------------------
Data extraction info:                                             |Data extraction info:
NxVer...:NX V3.0[103.0]                                           |NxVer...:NX V7.5[107.0]
NxCB.Rel:V1.1.1.18 Build:(Aug 27 2010)                            |NxCB.Rel:V1.1.1.18 Build:(May 20 2010)
Date....:18.10.10 22:29:51                                        |Date....:19.10.10 00:55:03
=================================================================================================================================
CheckBox Compair Result:
ResultIsErr......:True
ResultHasWaring..:True
ResultCode.......:64
ResultCodeBinary.:64
ResultMsgShort...:[PH:OK][MD:OK][AS:OK][DR:OK][EN:64 Msg:Err:Origin][Pef:OK]
=================================================================================================================================
CheckBox compair report:
PartHistoCheck: OK
Warning:DR(32):[ViewDependentObjects_n].[A3ENG_NEW]:[Value Differ(<>)!!]
 |->NX V3.0[103.0]: 74
 |->NX V7.5[107.0]: 73
++Error:EN(64):[Origin]:[X:[240.553540] Y:[291.117523] Z:[0.000000]]
 |->NX V3.0[103.0]: [Type:[26] Subtype:[3] Desc:[UF_dim_parallel] Name:[] Handle:[RM%UL=V1.0 PH=gBmdYwshQS4FxA AUID=Rgod6KgTQS4FxA R0000820300000018]
 |              Origin:[X:[153.753462] Y:[241.003475] Z:[0.000000]] Texts:[12,5]]
 |->NX V7.5[107.0]: [X:[153.753462] Y:[241.003475] Z:[0.000000]]
Warning:EN(64):[Texts.Text]:[61,66]
 |->NX V3.0[103.0]: [Type:[26] Subtype:[3] Desc:[UF_dim_parallel] Name:[] Handle:[RM%UL=V1.0 PH=gBmdYwshQS4FxA AUID=Rgod6KgTQS4FxA R0000820300000018]
 |              Origin:[X:[153.753462] Y:[241.003475] Z:[0.000000]] Texts:[12,5]]
 |->NX V7.5[107.0]: [12,5]
PerfDif.LoadPart.Factor>1.2 Warning:4.00sec(Nx7.5)/1000msec(Nx3)=4.0[PerfDifFactor]
```

Introduction NXCheckBox Analyze Data Compare Drawings

NXCheckBox extracts CGM files from specifications. These CGM files are used to create output data.

NX8.5.cgm

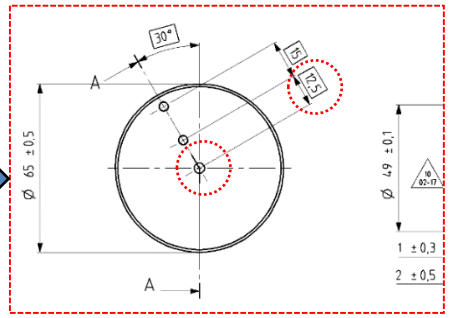

NX12.cgm

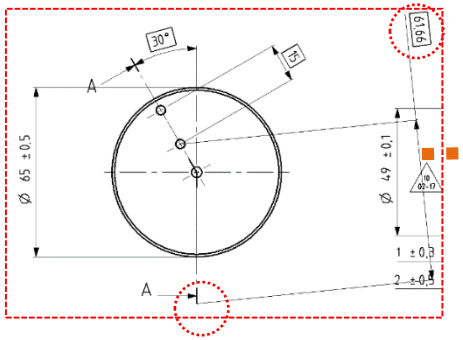

Merge.tif

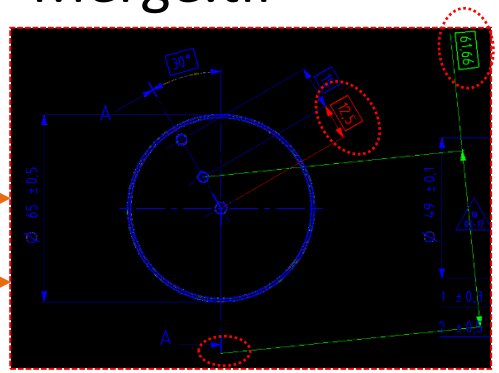

From this file we extract the PPM (Parts per Million) value which shows if drawings have differences.
The Merge.tif image file is also be used to see quick differences between drawings.

This method was developed by Thomas Körner from B/S/H.

Introduction CheckBox Analyze Data Compare CB.xml files

All analyzed Data from XML and from Drawing compare will be combined to one Result:

- PH = Part Header (from XML) 1
- MD = Model Data (from XML) 2
- AS = Assembly Data (from XML) 3
- DR = Drawing Data (from XML) 4
- EN = Entity Data Dim/Text (from XML) 5
- PPM= Dif.tif (from Drawing compare) 6

– If the Result Value is = 0 no differences between the part's are found.
Example:
[PH:OK] [MD:OK] [AS:OK] [DR:OK] [EN:OK] [PPM:OK]
1 2 3 4 5 6

– If the Result Value is > 0 there are differences between the Parts → the Parts must be checked !
Example:
[PH:OK] [MD:ERR:Lay;Refs;AS.Comp;DR.View] [AS:OK] [DR:OK] [EN:OK] [PPM:3078]
1 2 3 4 5 6

Introduction NXCheckBox Analyze Data Get Entire Results

All Result's are view via PLMJobManager

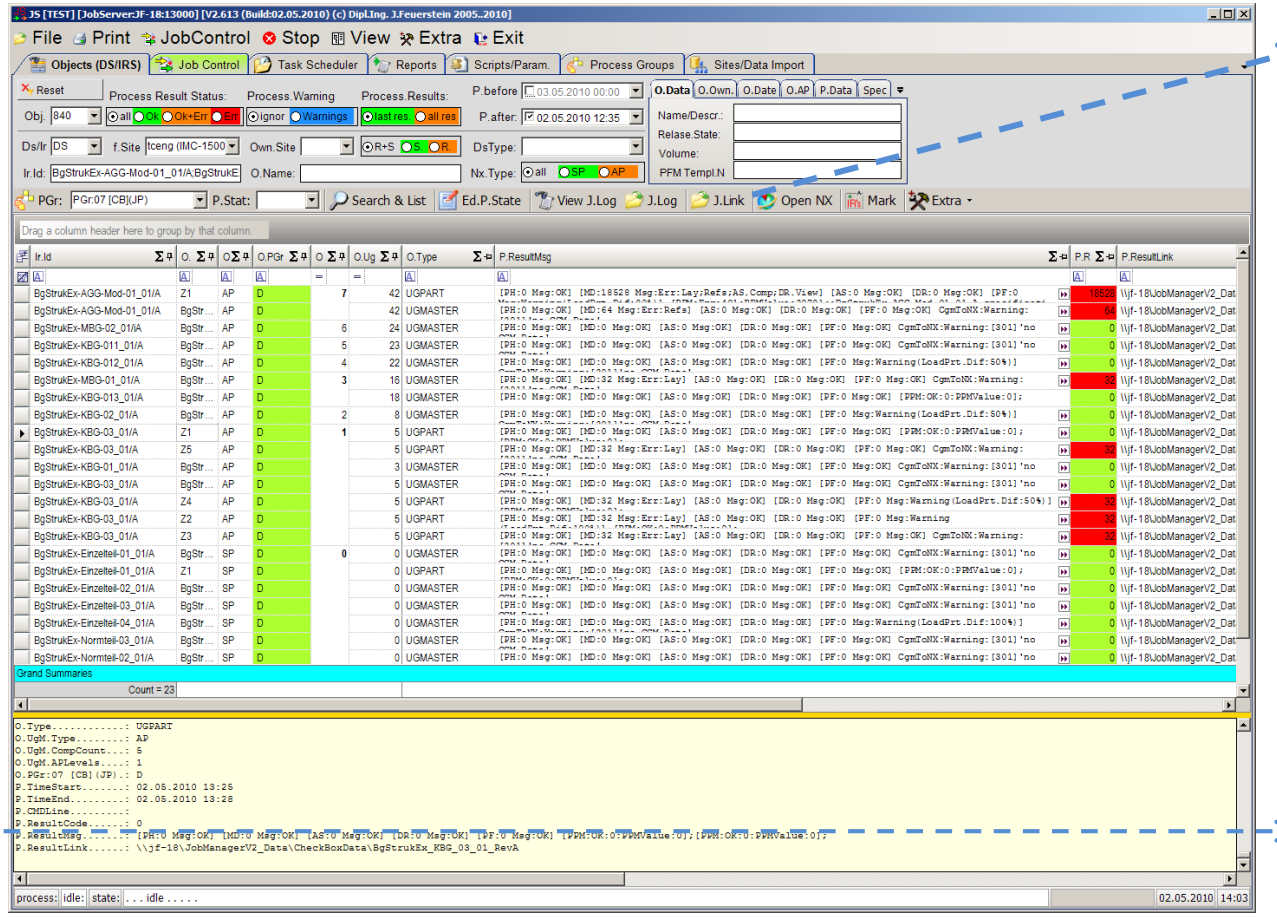

Via J.Link you have a Quick access to all Data

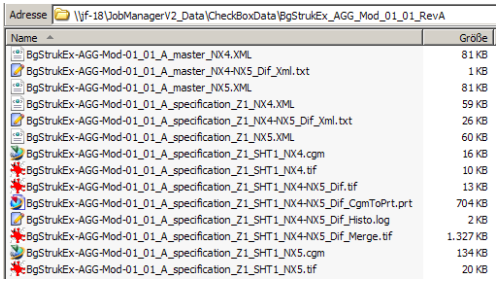

You export the Data to Excel analyze the Result for own Report's

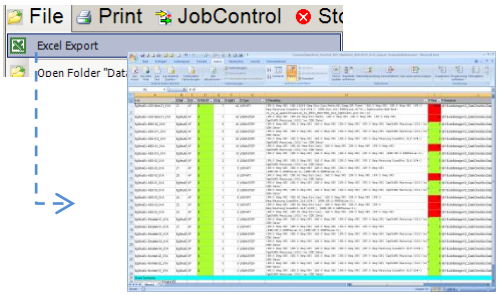

Introduction NXCheckBox Analysis for NX Continous Release

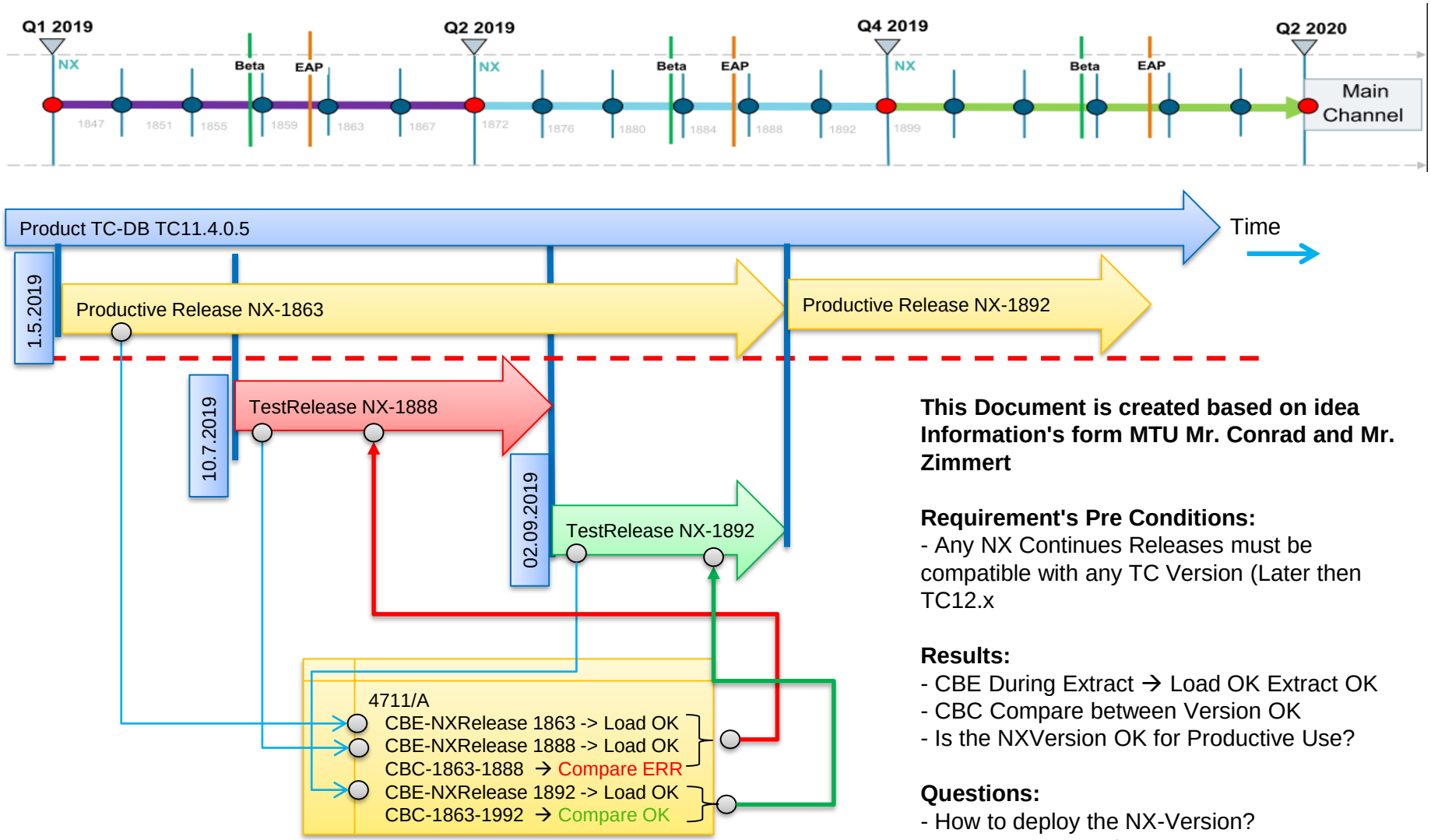

This Document is created based on idea Information's form MTU Mr. Conrad and Mr. Zimmert

Requirement's Pre Conditions:
- Any NX Continues Releases must be compatible with any TC Version (Later then TC12.x

Results:
- CBE During Extract → Load OK Extract OK
- CBC Compare between Version OK
- Is the NXVersion OK for Productive Use?

Questions:
- How to deploy the NX-Version?
- How to Manage License?

#New: 16.11.2018

Introduction CheckBox performance data recording

NXCheckBox in combination with PLMJobManager can also be used to record NX performance Data.
The princip is that timestamps in CbeckBox.xml files are used to harvest the performance data and to collect them into an Excel file. This Data can then be used to analyze the NX performance.

System Sketch

Result: extracted NX12 Data

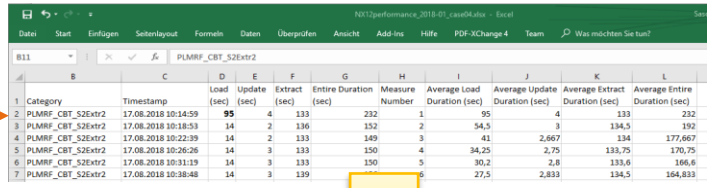

Category	Timestamp	Load (sec)	Update (sec)	Extract (sec)	Entire Duration (sec)	Measure Number	Average Load Duration (sec)	Average Update Duration (sec)	Average Extract Duration (sec)	Average Entire Duration (sec)
PLMRF_CBT_S2Extr2	17.08.2018 10:14:59	95	4	133	232	1	95	4	133	232
PLMRF_CBT_S2Extr2	17.08.2018 10:18:53	14	2	136	152	2	54,5	3	134,5	192
PLMRF_CBT_S2Extr2	17.08.2018 10:22:39	14	2	133	149	3	41	2,667	134	177,667
PLMRF_CBT_S2Extr2	17.08.2018 10:26:26	14	3	133	150	4	34,25	2,75	133,75	170,75
PLMRF_CBT_S2Extr2	17.08.2018 10:31:19	14	3	133	150	5	30,2	2,8	133,6	166,6
PLMRF_CBT_S2Extr2	17.08.2018 10:38:48	14	3	139	[illegible]	6	27,5	2,833	134,5	164,833

No.	Type	Description	Options
01	Load Duration	This is the time from opening a part until it is completely loaded	Load will be done with the settings of load environment
02	Update Duration	This is the time needed to run update actions at your part	Update feature Update Drawing views Update structure
03	CheckBox extract duration	This is the time NXCheckBox needs to read the CheckBox data from parts and write it into CbeckBox.xml file	NO
04	Entire Duration	Is the total amount of Load-, Update- and CheckBox extract- duration	NO

Performance measurement

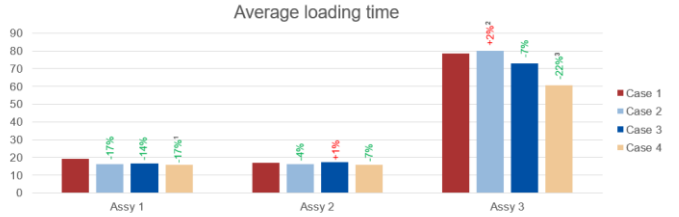

	Last saved with	NX version	TC@PLMRF	Load options
Case 1	NX10	NX10.0.3.5 MP18 / 18.1a / NX10_d	TC11.2.4.41 / 18.1.0.3 / SVN:50742	Partially Load – Lightweight display – WAVE all levels
Case 2	NX10	NX12.0.2.7 EAP / NX12_eap	TC11.2.4.41 / 18.1.0.3 / SVN:50742	Partially Load – Lightweight display – WAVE all levels
Case 3	NX10	NX12.0.2.9 MP0 / 18.2a / NX12_c	TC11.4.0.4 / 18.2.1.1-SNAPSHOT	Partially Load – Lightweight display – WAVE all levels
Case 4	NX12	NX12.0.2.9 MP0 / 18.2a / NX12_c	TC11.4.0.4 / 18.2.1.1-SNAPSHOT	Partially Load – Lightweight display – WAVE all levels

Introduction CheckBox performance data recording

You can enable and configure the CheckBox NX performance data recording in the CheckBox Settings manager → CB Config → 05 Duration Settings

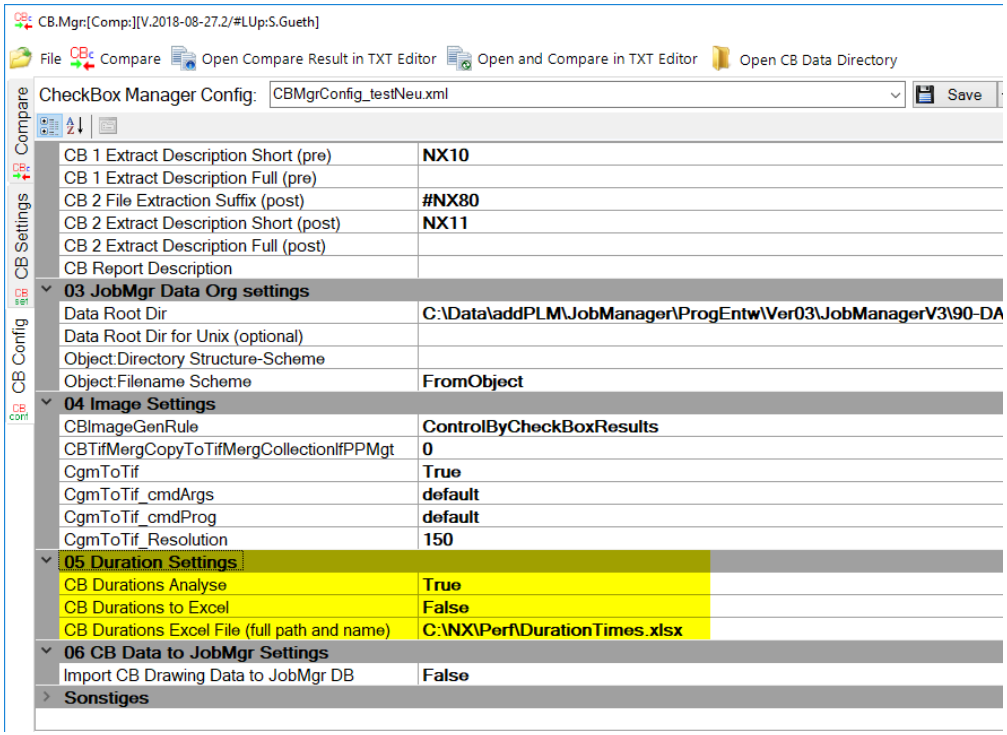

- **CB Durations Analyse** — If set to true, the duration for load, update, extract and the entire duration of the cb extract of each part file will be parsed from extracted xml file
- **CB Durations to Excel** — If set to true, an excel file will be generated, where all CheckBox duration times will be collected
- **CB Durations Excel File** — defines the excel file name where all the duration times should be collected

Introduction NXCheckBox performance data recording

CheckBox PLMJobManager

Technical Details

1.. 56000001173607_A2_master_56000001173607-a2_#NX12027MP00.xml — Extracted CB XML File

```
3    <ProgramData>
4     <ProgramName>NxCheckBox</ProgramName>
5     <ProgramRelease>V2.0.1.21 (NX 12)</ProgramRelease>
6     <BuildDate>(Nov 15 2017)</BuildDate>
7     <CustomLicense>unknown</CustomLicense>
8    </ProgramData>
9    <RunData>
10    <StartLoadPartDateTime>2018-08-17 12:38.22</StartLoadPartDateTime> (1)
11    <EndLoadPartDateTime>2018-08-17 12:38.54</EndLoadPartDateTime> (2)
12    <StartLoadPartMemoryAllocation>-1078884</StartLoadPartMemoryAllocation>
13    <EndLoadPartMemoryAllocation>-1900988</EndLoadPartMemoryAllocation>
14    <Action></Action>
15    <DetailOption>25,26</DetailOption>
16    <StartUpdateDateTime>2018-08-17 12:38.54</StartUpdateDateTime> (4)
17    <UpdateAllFeaturesReturnValue>0</UpdateAllFeaturesReturnValue> (5)
18    <StructureSyncReturnValue>0</StructureSyncReturnValue>
19    <UpdateAllViewsReturnValue>0</UpdateAllViewsReturnValue>
20    <EndUpdateDateTime>2018-08-17 12:38.56</EndUpdateDateTime>
21    <StartDateTime>2018-08-17 12:38.56</StartDateTime> (7)
22   </RunData>
23   <NxData>
2370 <RunDataPerformance>
2371  <EndDateTime>2018-08-17 12:41.11</EndDateTime> (8)
2372 </RunDataPerformance>
2373 </PLMJobManager_CheckBoxData>
2374
```

EndLoadPartDateTime (2)
–
StartLoadPartDateTime (1)
= Load (sec) (3)

EndUpdateDateTime (5)
–
StartUpdateDateTime (4)
= Update (sec) (6)

EndDateTime (8)
–
StartDateTime (7)
= Extract (sec) (9)

Entire Duration (10) =
Load (3) + Update (6) + Extract (9)

NX12performance_2018-01_case04.xlsx - Excel

(14) ID	(11) Category	(C) Timestamp	(3) Load (sec)	(6) Update (sec)	(9) Extract (sec)	(10) Entire Duration (sec)	(12) Measure Number	(13) Average Load Duration (sec	(13) Average Update Duration (sec)	(13) Average Extract Duration (sec)	(13) Average Entire Duration (sec
56000001173607/A2/master/56000001173607-a2	PLMRF_CBT_S2Extr2	17.08.2018 10:14:59	**95**	4	133	232	1	95	4	133	232
56000001173607/A2/master/56000001173607-a2	PLMRF_CBT_S2Extr2	17.08.2018 10:18:53	14	2	136	152	2	54,5	3	134,5	192
56000001173607/A2/master/56000001173607-a2	PLMRF_CBT_S2Extr2	17.08.2018 10:22:39	14	2	133	149	3	41	2,667	134	177,667
56000001173607/A2/master/56000001173607-a2	PLMRF_CBT_S2Extr2	17.08.2018 10:26:26	14	3	133	150	4	34,25	2,75	133,75	170,75
56000001173607/A2/master/56000001173607-a2	PLMRF_CBT_S2Extr2	17.08.2018 10:31:19	14	3	133	150	5	30,2	2,8	133,6	166,6
56000001173607/A2/master/56000001173607-a2	PLMRF_CBT_S2Extr2	17.08.2018 10:38:48	14	3	139	156	6	27,5	2,833	134,5	164,833
56000001173607/A2/master/56000001173607-a2	PLMRF_CBT_S2Extr2	17.08.2018 10:42:35	14	2	134	150	7	25,571	2,714	134,429	162,714

Average Times (13) of same **ID** (14) and **Category** (11) in combination with **Measure Number** (12)

Benefits for using NXCheckBox

- ✓ Getting overview about NX – TC Software Quality
- ✓ Getting overview about your NX - TC Data Quality
- ✓ Helps to setup NX - TC customer settings
- ✓ Helps to find issues before designers working with the new NX – TC Version
- ✓ Helps to keep the value of PLM Data
- ✓ Reduces cost's "after upgrade" because
  Data and software issues can be better identified and solved before upgrade.
- ✓ Reduces Upgrade risks

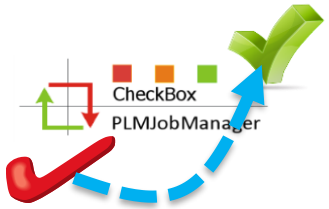

Introduction NXCheckBox Involved Company's

The CheckBox Software is developed by Mr, Bernd Schieber (SISW Stuttgart).
Software specification, project coordination and PLMJobManager integration was done by Mr. Josef Feuerstein (addPLM)

All Company's did spend 3 Day's of Services to SISW.

At the Meeting (on 28.04.2010) the participants' agreed that it is possible for another company to join this Project. To take part in this Project the new company has also to spend 3 Day's of Services on this project.
Info: The PLMJobManager Software is a separated Software and is not Part of the CheckBox Tool.

KION GROUP
New 06.2011

B/S/H/

Siemens PLM Software

CheckBox PLMJobManager

FEI

MTU Aero Engines

KBA

ASML

HDW

RENK

zimmer Personal Fit. Renewed Life.

EATON Powering Business Worldwide

TrelleborgVibracoustic

WINDMOLLER & HÖLSCHER

System requirements

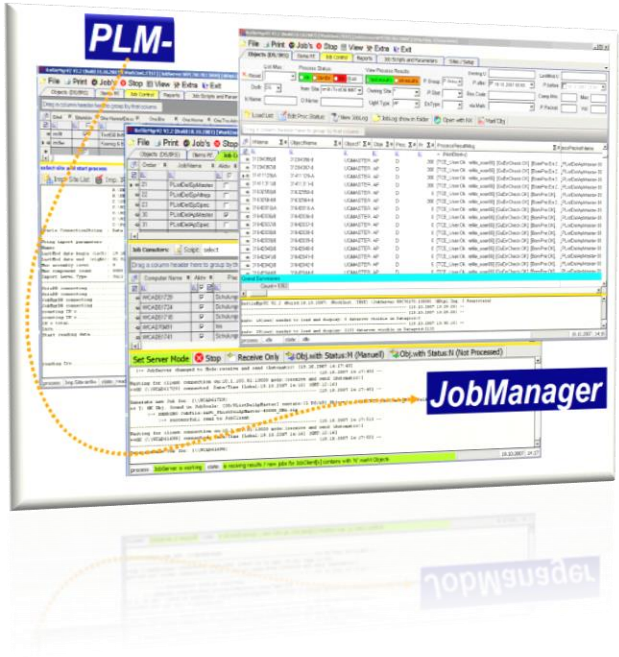

JobServer:

- Win7 Win10 Workstation
- W2008 .. W2016 Server

JobClient:

- Win7 Win10 Workstation
- W2008 .. W2016 Server
- with Full NX- und TC- installation